- Super cool and awesome
- Wins first place at competition
- Solves maze in .3 seconds

Buttons:
- One to stop the code
- One to start the code
- One to reset the code

Motor Driver:
- DRV8835
    - We want this embedded in the pcb
    -
- Our Last Motor Driver:
    - Adafruit DRV8833 DC/Stepper Motor Driver Breakout Board

Motors:
- Micro Metal Gearmotor HPCB 6V with Extended Motor Shaft with encoder

MicroController:
- Raspberry Pi Pico v2 WH

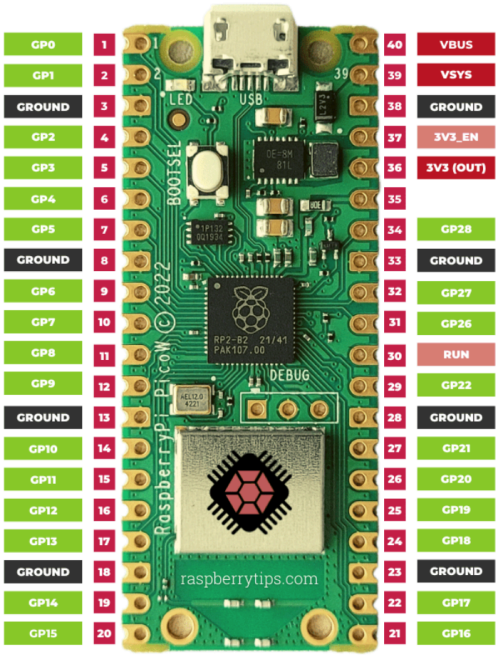

-

Power:
- Batteries (LiPo)
    - URGENEX 7.4V Lipo Battery

    - B6 Battery Charger
- Switching Regulator
    - Vmin input = 6, Vmax input = 9, Vout = 5, Iout = 0.5A
    - Pico (max out 300mA) ~150mA???, emitter 100mA, sensor 50mA, motor drivers minimal current, both motor encoders 25mA, buzzer minimal current
    - WEBENCH
    - TPS62163
    - 17V, 5Vout, 1A, Buck Converter with Power Good

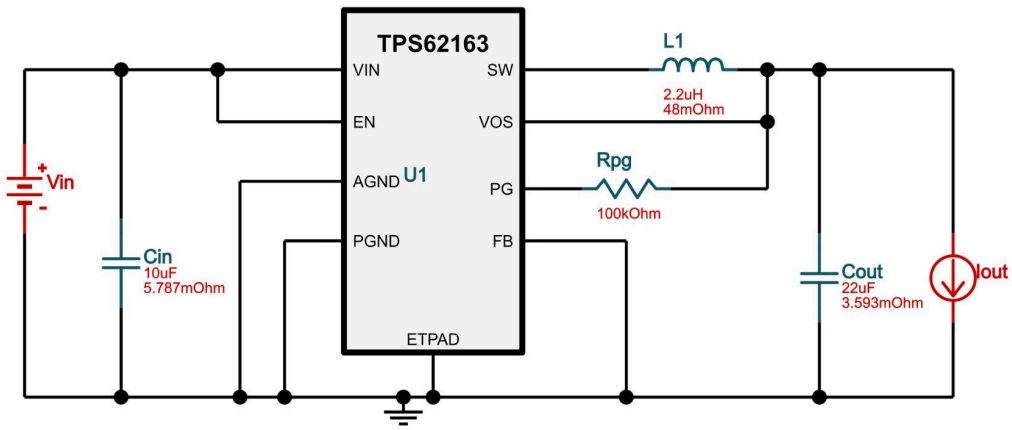

Our Last Pin output:

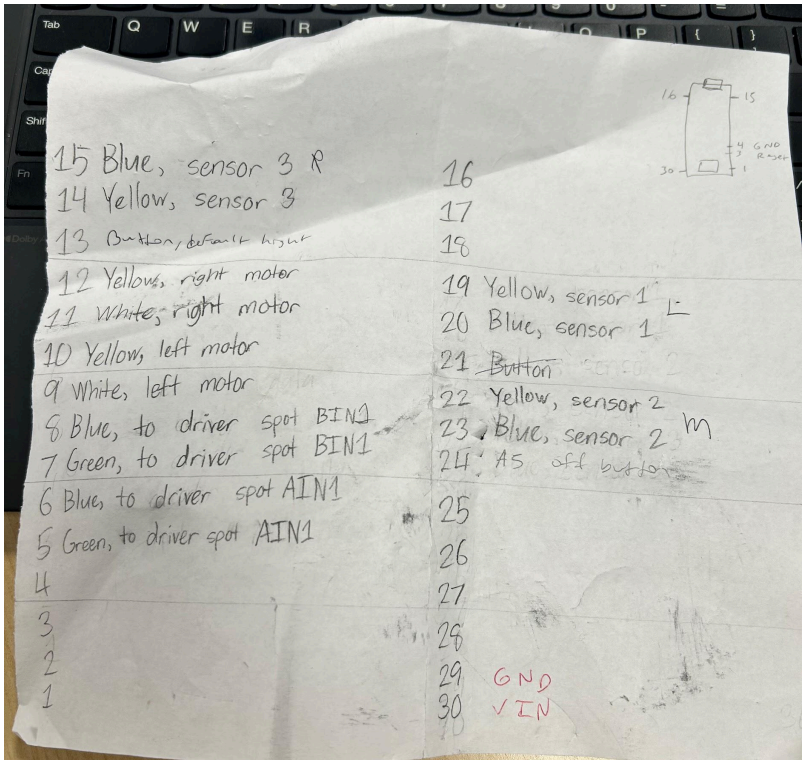

Sensors:

- [TLCR5800 Visible RED LED's]
- [BPW96B Phototransistors]

Can also order IR sensors just so we have them.

- [SFH 4545] Emitter
- [TEFT4300] Receiver
- 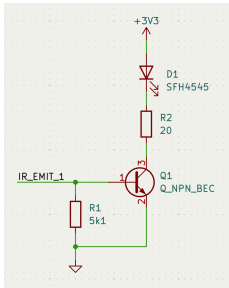

IMU:

- [????????????????]

Notes:

Use the full board and follow the spec sheet
Use some inductors on the motors for preventing stalling
Receiver into voltage divider

Need regulator for powering
300mA total